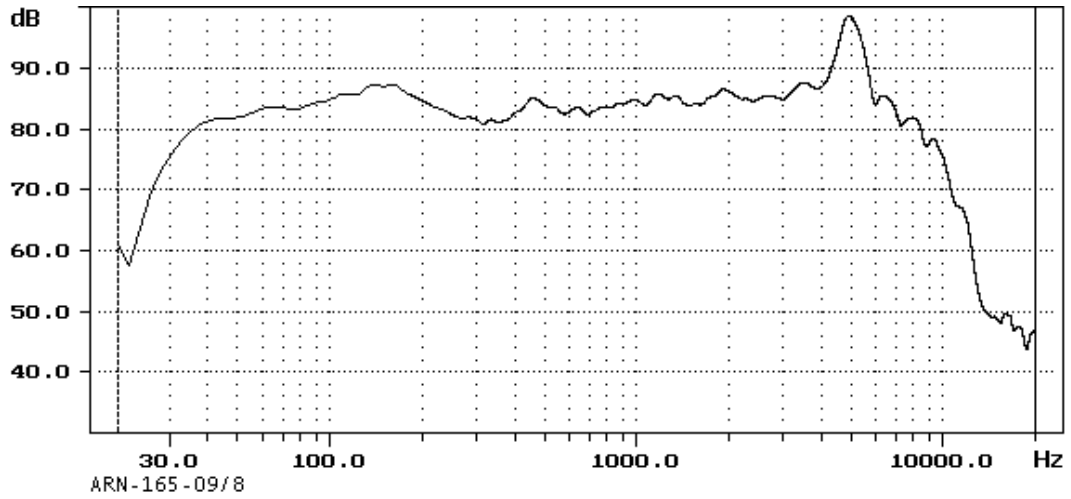
dB
90.0
80.0
70.0
60.0
50.0
40.0
30.0
100.0
1000.0
10000.0
Hz
ARN-165-09/8

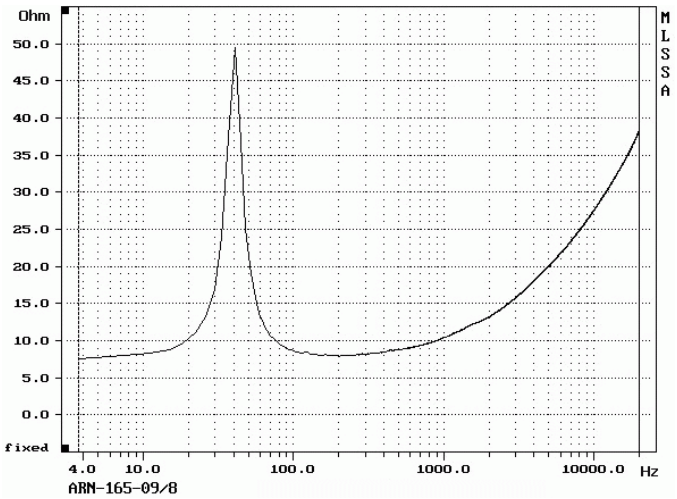
Ohm
50.0
45.0
40.0
35.0
30.0
25.0
20.0
15.0
10.0
5.0
0.0
fixed
M
L
S
S
A
4.0
10.0
100.0
1000.0
10000.0
Hz
ARN-165-09/8

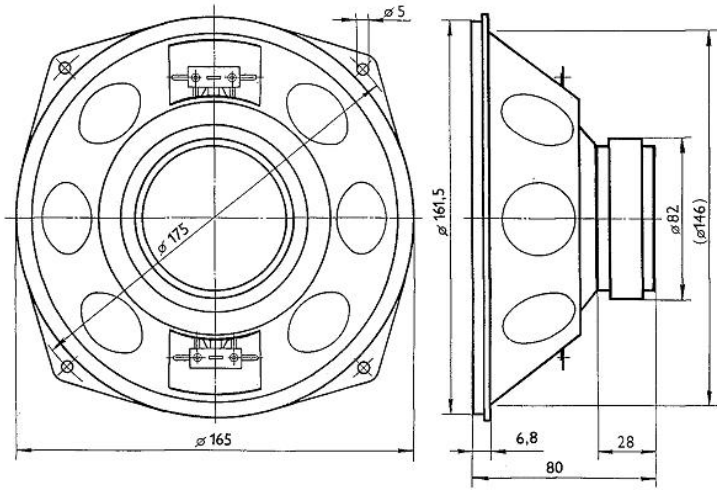
ø5
ø175
ø165
ø161,5
ø82
(ø146)
6,8
28
80