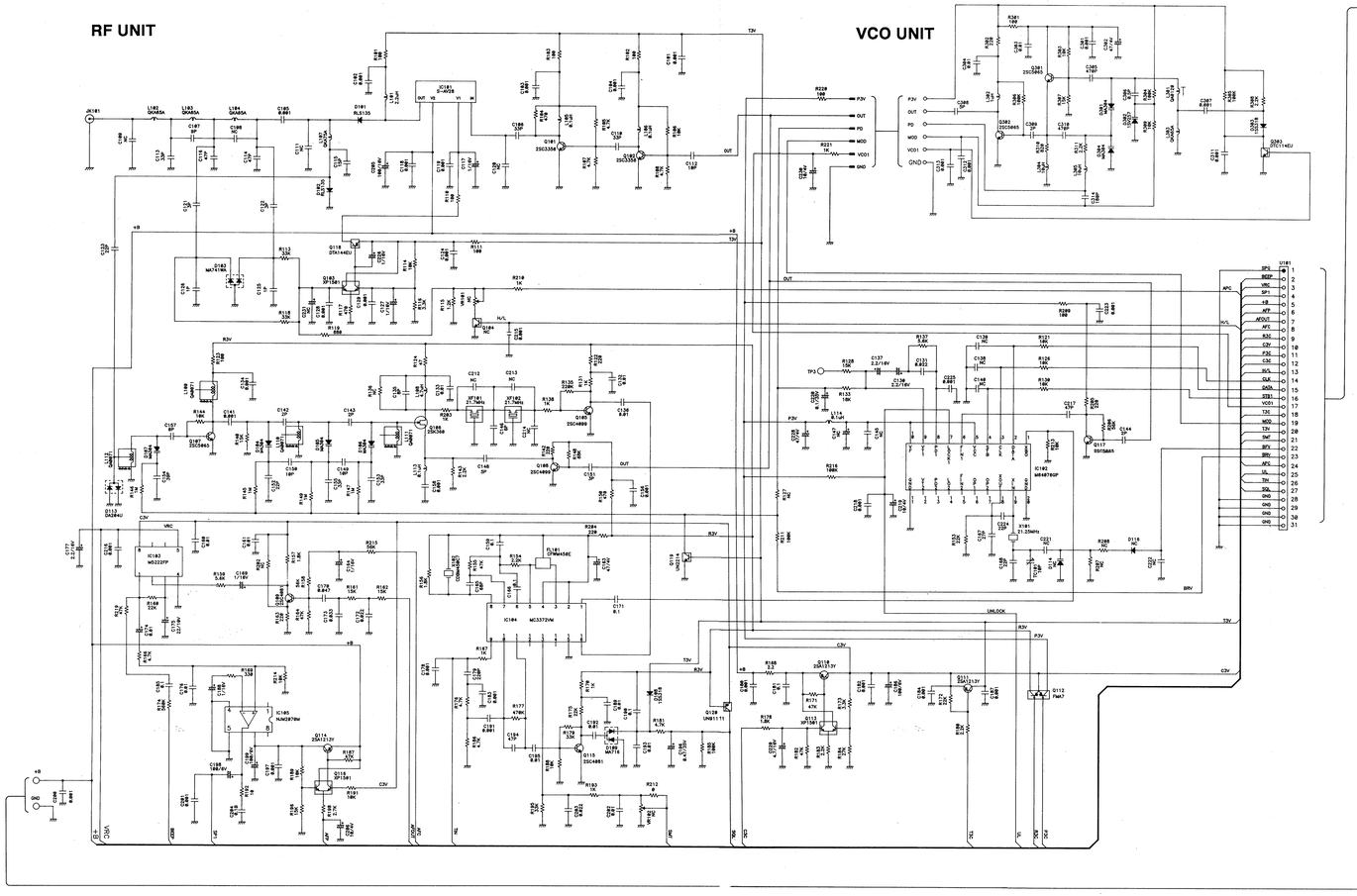

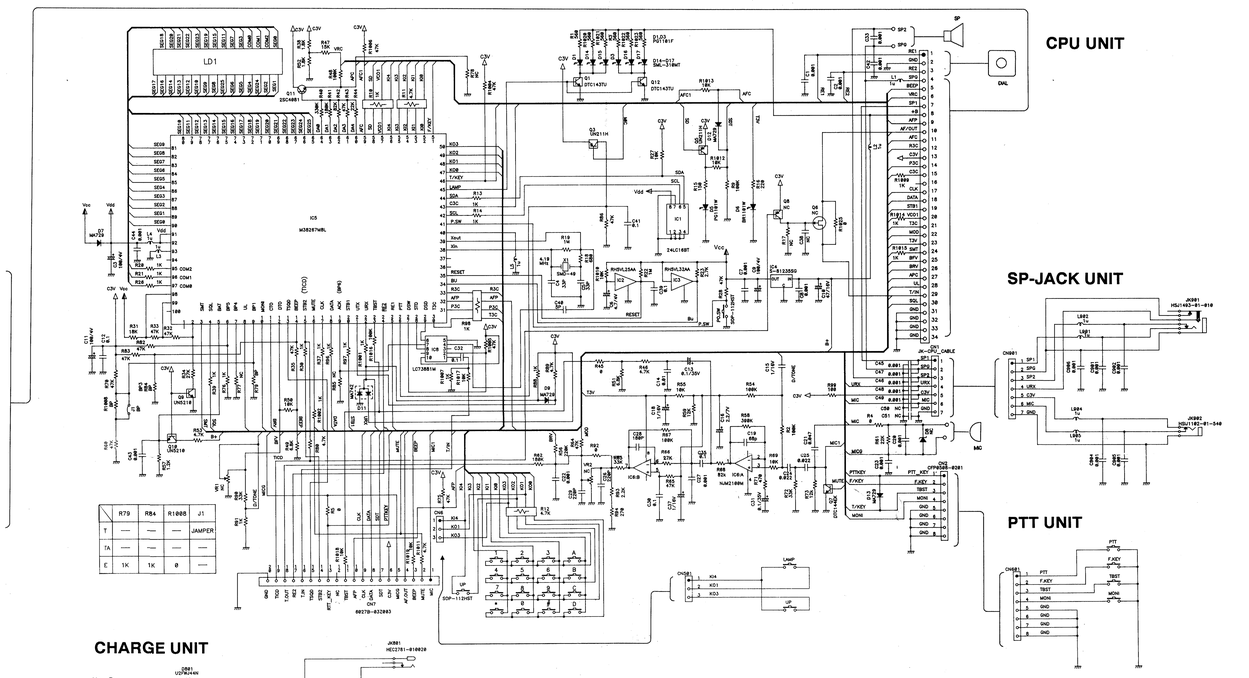

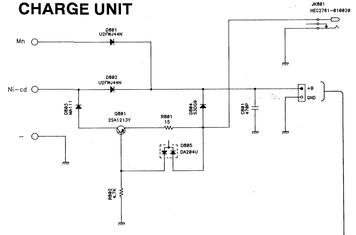

SCHEMATIC DIAGRAM DJ-191T

Specifications are subject to change without notice or obligation.