RF UNIT

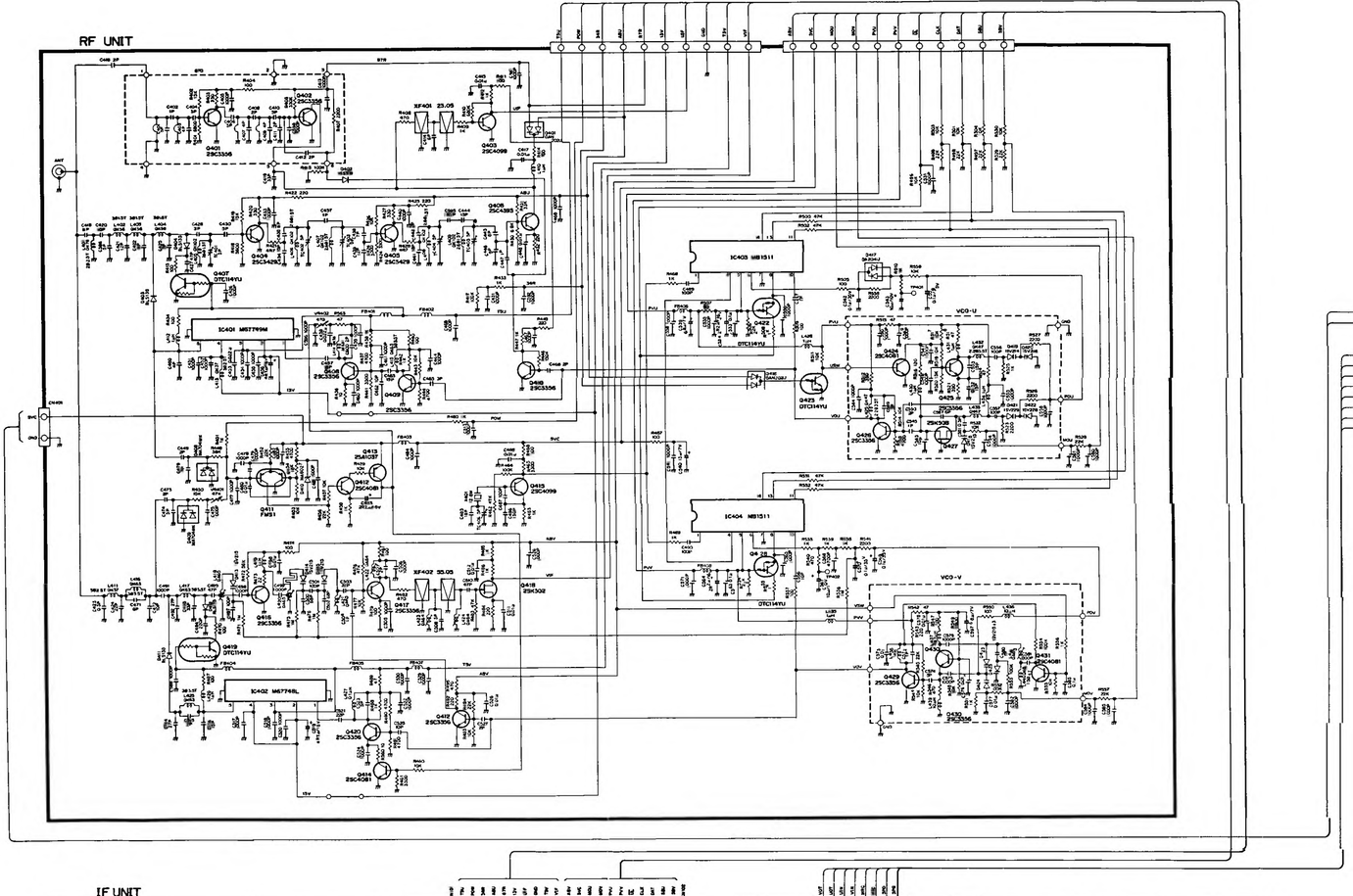

JACK UNIT

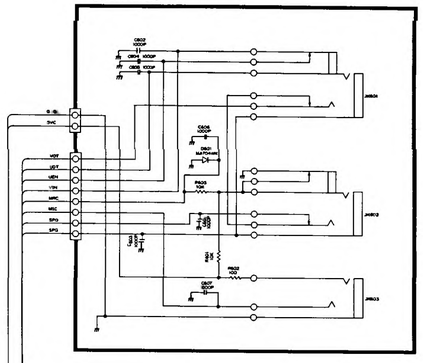

TSQ UNIT(DJ-580 E/ED·OPTION)

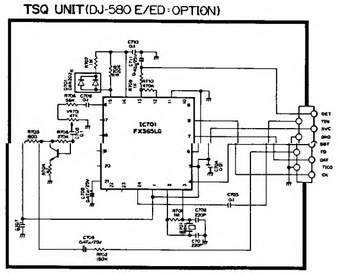

IF UNIT

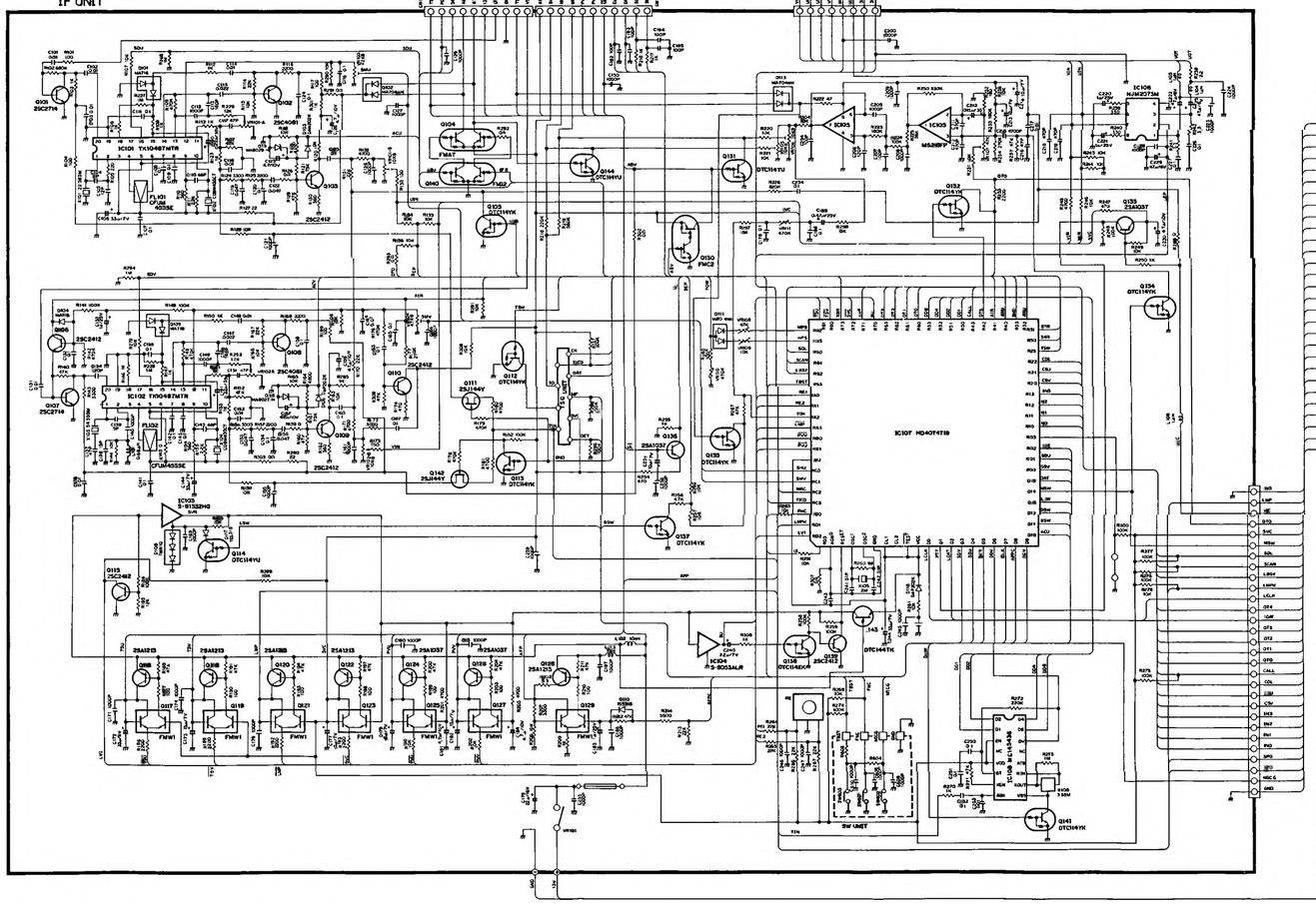

LCD UNIT

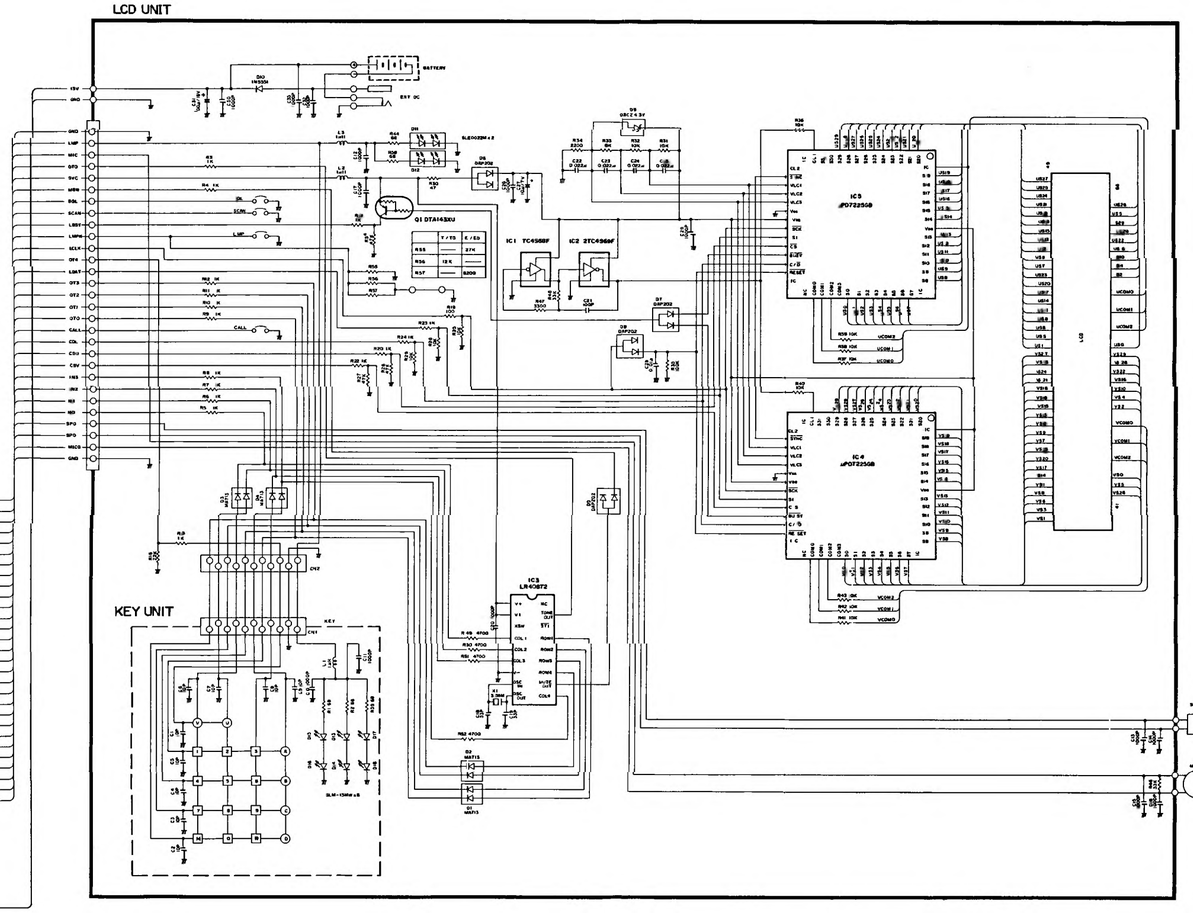

KEY UNIT