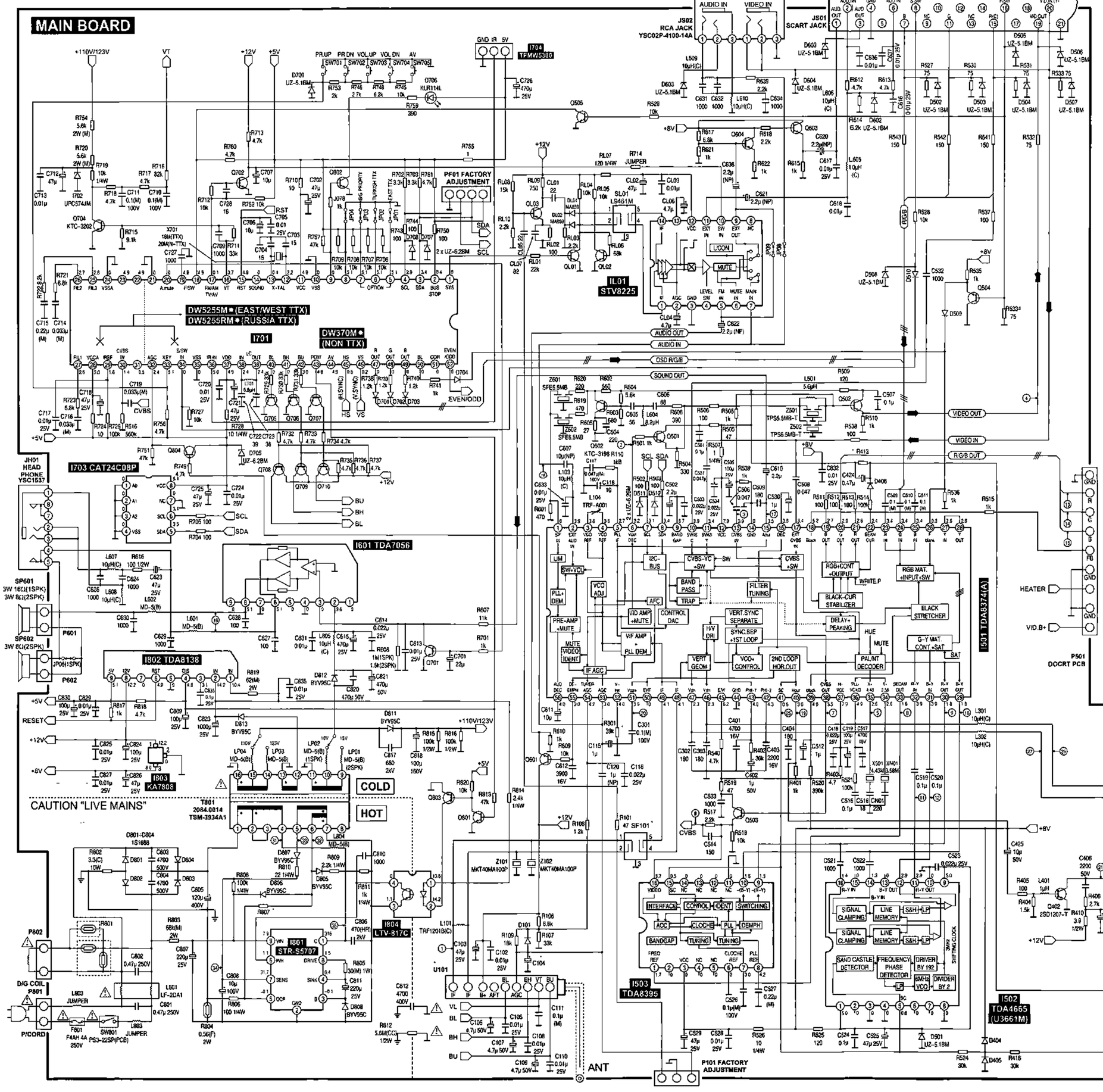
MAIN BOARD
I701
DW5255M*(EAST/WEST TTX)
DW5255RM*(RUSSIA TTX)
DW370M*
(NON TTX)
IL01
STV8225
I703 CAT24C08P
I601 TDA7056
I802 TDA8138
I803
KA7808
COLD
HOT
CAUTION "LIVE MAINS"
T801
2084.0014
TSM-3934A1
I801
STR-S5707
I804
LTV-817C
I503
TDA8395
I501 TDA8374(A)
I502
TDA4665
(U3661M)
I301 TDA8356
P101 FACTORY
ADJUSTMENT
PF01 FACTORY
ADJUSTMENT
ANT
JS01
SCART JACK
JS02
RCA JACK
YSC02P-4100-14A
I704
TFMW5380
JH01
HEAD
PHONE
YSC1537
SP601
3W 16Ω(1SPK)
3W 8Ω(2SPK)
SP602
3W 8Ω(2SPK)
P601
P602
P801
P802
D/G COIL
P/CORD
F501
F4AH 4A
250V
SW801
PS3-22SP(PCB)
L801
LF-2DA1
T401
TD-10A2
T402
1142.5057
P401
VERT.
HOR.
HV
FOCUS
SCREEN
HEATER
VID.B+
EVEN/ODD
V.SYNC
H.SYNC
ABL
+110V/123V
+8V
+12V
+5V
CTR BOARD
I901 TDA6106Q(R)
I902 TDA6106Q(G)
I903 TDA6106Q(B)
P904/P905
DO CRT GND
P501
DOCRT PCB
P501A
OD MAIN PCB
REMOTE CONTROL R-28B03
GMS30112-R098
1-9: PRO-PR9
13: POWER
14: MUTE
16: RECALL/REVEAL
17: L/HOLD
18: R/SUBPAGE
33: PR UP
34: PR DOWN
39: SLEEP/SIZE
40: MENU
41: OK.NOR/INDEX
46: SKIP/CANCEL
51: TIME/Y
53: MODE/C
55: MOVE/G
56: DEL/R
57: AV
61. TTX/TV