Aluminum Capacitors
General Purpose, Miniature, Radial Lead

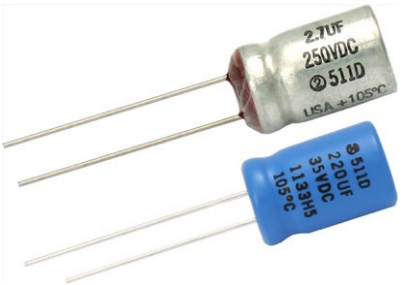

FEATURES

- + 105 °C
- Suitable long life applications
- Material categorization: For definitions of compliance please see www.vishay.com/doc?99912

Pb-free Available

QUICK REFERENCE DATA

DESCRIPTION	VALUE
Nominal case size Ø D x L in mm	0.236" x 0.433" [6.0 x 11.0] to 0.709" x 1.417" [18.0 x 36.0]
Operating temperature	- 40 °C to + 105 °C
Rated capacitance range, C_R	1 µF to 10 000 µF
Tolerance on C_R	± 20 %
Rated voltage range, U_R	6.3 WV_{DC} to 250 WV_{DC}
Termination	2 or 3 radial leads
Life validation test at 105 °C	1000 h (diameter ≤ 0.315" [8.0]): 2000 h (diameter > 0.315" [8.0]): ΔCAP ≤ 15 % (6.3 WV_{DC} to 16 WV_{DC}), ≤ 10 % (25 WV_{DC} to 250 WV_{DC}) from initial measurement. ΔESR ≤ 1.2 x initial specified limit. ΔDCL ≤ initial specified limit
Shelf life at 105 °C	500 h: ΔCAP ≤ 10 % from initial measurement. ΔESR 1.2 x initial specified limit. ΔDCL ≤ 2 x initial specified limit.
DC leakage current	6.3 WV_{DC} to 63 WV_{DC} units: I = 0.005 CV 100 WV_{DC} to 250 WV_{DC} units: I = 0.01 CV I in µA, C in µF, V in Volts

RIPPLE CURRENT MULTIPLIERS

TEMPERATURE				
AMBIENT TEMPERATURE	MULTIPLIERS			
+ 105 °C	0.4			
+ 95 °C	0.7			
+ 85 °C	1.0			
+ 75 °C	1.2			
≤ + 65 °C	1.4			
FREQUENCY (Hz)				
WV_{DC}	50 TO 60	100 TO 120	300 TO 400	1K TO 100K
6.3 to 25	0.85	1.00	1.05	1.1
26 to 250	0.80	1.00	1.30	1.4

LEAD LENGTH FOR D TERMINATION

CASE CODE	L_1 (-)	L_2 (+)
D	0.591 [15.0]	0.787 [20.0]

DIMENSIONS in inches [millimeters]

CASE CODE	NOMINAL		STYLES 2 AND 4		STYLES 3 AND 5		LEAD SPACING		LEAD DIAMETER	
	D	L	D (max.)	L (max.)	D (max.)	L (max.)	S ± 0.024 [0.60]	T ± 0.02 [0.50]	NOMINAL	AWG NO.
AA	0.236 [6.0]	0.433 [11.0]	0.256 [6.5]	0.472 [12.0]	0.256 [6.5]	0.512 [13.0]	0.098 [2.5]	n/a	0.025 [0.63]	22
BB	0.315 [8.0]	0.472 [12.0]	0.335 [8.5]	0.512 [13.0]	0.335 [8.5]	0.551 [14.0]	0.138 [3.5]	n/a	0.025 [0.63]	22
CC	0.394 [10.0]	0.512 [13.0]	0.413 [10.5]	0.563 [14.3]	0.413 [10.5]	0.630 [16.0]	0.197 [5.0]	n/a	0.025 [0.63]	22
CD	0.394 [10.0]	0.630 [16.0]	0.413 [10.5]	0.669 [17.0]	0.413 [10.5]	0.740 [18.8]	0.197 [5.0]	n/a	0.025 [0.63]	22
CG	0.394 [10.0]	0.787 [20.0]	0.413 [10.5]	0.846 [21.5]	0.413 [10.5]	0.906 [23.0]	0.197 [5.0]	n/a	0.025 [0.63]	22
DG	0.492 [12.5]	0.787 [20.0]	0.512 [13.0]	0.846 [21.5]	0.512 [13.0]	0.906 [23.0]	0.197 [5.0]	0.098 [2.5]	0.032 [0.81]	20
DK	0.492 [12.5]	0.984 [25.0]	0.512 [13.0]	1.043 [26.5]	0.512 [13.0]	1.142 [29.0]	0.197 [5.0]	0.098 [2.5]	0.032 [0.81]	20
EK	0.630 [16.0]	0.984 [25.0]	0.650 [16.5]	1.031 [26.2]	0.650 [16.5]	1.098 [27.9]	0.295 [7.5]	0.150 [3.8]	0.032 [0.81]	20
EN	0.630 [16.0]	1.260 [32.0]	0.650 [16.5]	1.319 [33.5]	0.650 [16.5]	1.417 [36.0]	0.295 [7.5]	0.150 [3.8]	0.032 [0.81]	20
ER	0.630 [16.0]	1.417 [36.0]	0.650 [16.5]	1.476 [37.5]	0.650 [16.5]	1.575 [40.0]	0.295 [7.5]	0.150 [3.8]	0.032 [0.81]	20
FR	0.709 [18.0]	1.417 [36.0]	0.728 [18.5]	1.476 [37.5]	0.728 [18.5]	1.575 [40.0]	0.295 [7.5]	0.150 [3.8]	0.032 [0.81]	20

For technical questions, contact: aluminumcaps4@vishay.com

THIS DOCUMENT IS SUBJECT TO CHANGE WITHOUT NOTICE. THE PRODUCTS DESCRIBED HEREIN AND THIS DOCUMENT ARE SUBJECT TO SPECIFIC DISCLAIMERS, SET FORTH AT www.vishay.com/doc?91000

TAPE AND REEL, SPECIFICATIONS TO EIA-468 in inches [millimeters]

Formed Leads

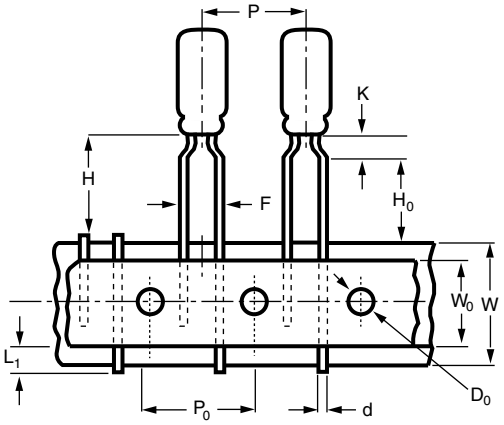

DIMENSIONS in inches [millimeters]		
CASE SIZE	F LEAD SPACING	STD. QTY/REEL
0.236 x 0.433 [6.0 x 11.0]	0.197 [5.0]	800
0.315 x 0.472 [8.0 x 12.0]	0.197 [5.0]	700

Unformed Leads

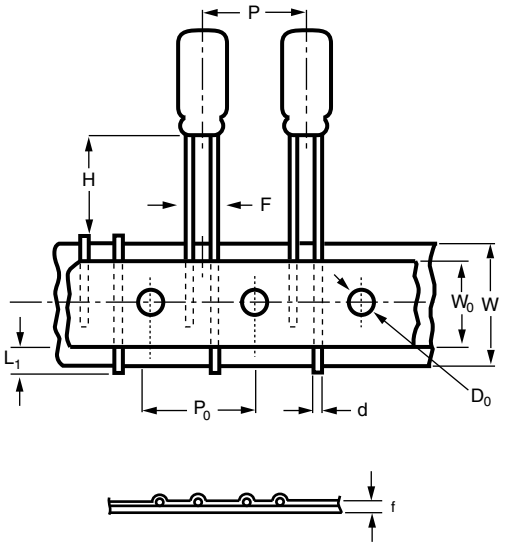

DIMENSIONS in inches [millimeters]		
CASE SIZE	F LEAD SPACING	STD. QTY/REEL
0.236 x 0.433 [6.0 x 11.0]	0.098 (1) [2.5]	800
0.315 x 0.472 [8.0 x 12.0]	0.140 (1) [3.5]	700
0.394 x 0.512 [10.0 x 13.0]	0.197 [5.0]	500
0.394 x 0.630 [10.0 x 16.0]	0.197 [5.0]	500
0.394 x 0.787 [10.0 x 20.0]	0.197 [5.0]	500

Note

(1) Available as special order

For technical questions, contact: aluminumcaps4@vishay.com
THIS DOCUMENT IS SUBJECT TO CHANGE WITHOUT NOTICE. THE PRODUCTS DESCRIBED HEREIN AND THIS DOCUMENT ARE SUBJECT TO SPECIFIC DISCLAIMERS, SET FORTH AT www.vishay.com/doc?91000

DIMENSIONS in inches [millimeters]					
ITEM	CASE SIZE (Diameter x Length)				
	0.236 x 0.433 [6.0 x 11.0]	0.315 x 0.472 [8.0 x 12.0]	0.394 x 0.512 [10.0 x 13.0]	0.394 x 0.630 [10.0 x 16.0]	0.394 x 0.787 [10.0 x 20.0]
d - Lead-wire diameter	0.025 [0.63]	0.025 [0.63]	0.025 [0.63]	0.025 [063]	0.020 [0.5]
P - Pitch of component	0.500 [12.7]	0.500 [12.7]	0.500 [12.7]	0.500 [12.7]	0.500 [12.7]
P_0 - Feed hole pitch	0.500 [12.7]	0.500 [12.7]	0.500 [12.7]	0.500 [12.7]	0.500 [12.7]
F - Lead-to-lead distance	0.197 [5.0]	0.197 [5.0]	0.197 [5.0]	0.197 [5.0]	0.197 [5.0]
K - Clinch height	0.098 [2.5]	0.157 [4.0]	n/a	n/a	n/a
H - Height of component from tape center	0.728 [18.5]	0.787 [20.0]	0.906 [23.0]	0.906 [23.0]	0.906 [23.0]
H_0 - Lead-wire clinch height	0.630 [16.0]	0.630 [16.0]	n/a	n/a	n/a
W - Tape width	0.709 [18.0]	0.709 [18.0]	0.709 [18.0]	0.709 [18.0]	0.709 [18.0]
W_0 - Hold down tape width	0.591 [15.0]	0.591 [15.0]	0.591 [15.0]	0.591 [15.0]	0.591 [15.0]
D_0 - Feed hole diameter	0.157 [4.0]	0.157[4.0]	0.157 [4.0]	0.157 [4.0]	0.157 [4.0]
t - Total tape thickness	0.028 [0.7]	0.028 [0.7]	0.157 [4.0]	0.157 [4.0]	0.157 [4.0]
L_1 - Maximum lead protrusion	0.118 [3.0]	0.118 [3.0]	0.118 [3.0]	0.118 [3.0]	0.118 [3.0]

Note

- Terminal code “I” = Tape and reel. Terminal code “+” = Tape and ammo. Positive leader is standard. Negative leader is available by special order.

ORDERING EXAMPLE

Electrolytic capacitor 511D series: 511D 157 M 063 CG 4 D

DESCRIPTION	
CODE	EXPLANATION
511D	Product type
157	Capacitance value (150 µF)
M	Tolerance (M = ± 20 %)
063	Voltage rating at 105 °C (063 = 63 V)
DF	Can size (see dimensions table)
4	Sleeve and sealing (4 = P.V.C. sleeve)
D	Packaging (D = Bulk; straight leads)

Note

- For lead (Pb)-free/RoHS compliant products add suffix “E3” to part number.
  Example: 511D157M063CG4DE3

ELECTRICAL DATA AND ORDERING INFORMATION							
CAPACITANCE (µF)	PART NUMBER	NOMINAL CASE SIZE D x L IN INCHES [mm]	MAX. ESR AT + 25 °C (mΩ)		MAX. RIPPLE AT + 85 °C (A)		MAX. IMPEDANCE AT + 25 °C (mΩ) 100 Hz
			120 Hz	20 kHz TO 40 kHz	120 Hz	20 kHz TO 40 kHz	
6.3 WV_{DC} AT + 105 °C, SURGE = 8 V							
150.0	511D157M6R3AA4D	0.236 x 0.433 [6.0 x 11.0]	3.130	2.720	0.123	0.132	2.800
1200.0	511D128M6R3CG4D	0.394 x 0.787 [10.0 x 20.0]	0.420	0.270	0.590	0.741	0.286
4700.0	511D478M6R3EK4D	0.630 x 0.984 [16.0 x 25.0]	0.121	0.075	1.580	2.010	0.090
10 000.0	511D109M6R3FR4D	0.630 x 1.417 [16.0 x 36.0]	0.068	0.050	2.640	3.070	0.061
10 WV_{DC} AT + 105 °C, SURGE = 13 V							
100.0 (1)	511D107M010AA4D	0.236 x 0.433 [6.0 x 11.0]	4.073	2.800	0.108	0.131	2.900
220.0 (1)	511D227M010BB4D	0.315 x 0.472 [8.0 x 12.0]	1.855	1.150	0.198	0.252	1.300
1000.0	511D108M010CG4D	0.394 x 0.787 [10.0 x 20.0]	0.407	0.290	0.603	0.715	0.290
3300.0	511D338M010EK4D	0.630 x 0.984 [16.0 x 25.0]	0.166	0.086	1.350	1.880	0.094
4700.0	511D478M010EN4D	0.630 x 1.260 [16.0 x 32.0]	0.122	0.060	1.740	2.480	0.067

Note

(1) These values are normally stocked. See Original Ratings for more values that are stocked.

For technical questions, contact: aluminumcaps4@vishay.com
THIS DOCUMENT IS SUBJECT TO CHANGE WITHOUT NOTICE. THE PRODUCTS DESCRIBED HEREIN AND THIS DOCUMENT ARE SUBJECT TO SPECIFIC DISCLAIMERS, SET FORTH AT www.vishay.com/doc?91000

ELECTRICAL DATA AND ORDERING INFORMATION

CAPACITANCE (µF)	PART NUMBER	NOMINAL CASE SIZE D x L IN INCHES [mm]	MAX. ESR AT + 25 °C (mΩ)		MAX. RIPPLE AT + 85 °C (A)		MAX. IMPEDANCE AT + 25 °C (mΩ) 100 Hz
			120 Hz	20 kHz TO 40 kHz	120 Hz	20 kHz TO 40 kHz	
16 WV_{DC} AT + 105 °C, SURGE = 20 V							
150.0	511D157M016BB4D	0.315 x 0.472 [8.0 x 12.0]	2.433	1.250	0.173	0.241	1.250
470.0 (1)	511D477M016CD4D	0.394 x 0.630 [10.0 x 16.0]	0.748	0.442	0.419	0.522	0.442
1500.0	511D158M016DK4D	0.492 x 0.984 [12.5 x 25.0]	0.243	0.140	0.971	1.270	0.140
2200.0	511D228M016EK4D	0.630 x 0.984 [16.0 x 25.0]	0.176	0.090	1.310	1.840	0.098
3300.0	511D338M016EN4D	0.630 x 1.260 [16.0 x 32.0]	0.147	0.062	1.580	2.440	0.067
20 WV_{DC} AT + 105 °C, SURGE = 25 V							
120.0	511D127M020BB4D	0.315 x 0.472 [8.0 x 12.0]	2.650	1.350	0.166	0.232	1.350
220.0	511D227M020CC4D	0.394 x 0.512 [10.0 x 13.0]	1.472	0.950	0.266	0.331	0.900
330.0	511D337M020CD4D	0.394 x 0.630 [10.0 x 16.0]	0.981	0.550	0.350	0.468	0.500
470.0	511D477M020CG4D	0.394 x 0.787 [10.0 x 20.0]	0.679	0.300	0.467	0.703	0.305
1500.0	511D158M020EK4D	0.630 x 0.984 [16.0 x 25.0]	0.243	0.110	1.120	1.660	0.100
2200.0	511D228M020EN4D	0.630 x 1.260 [16.0 x 32.0]	0.163	0.080	1.510	2.150	0.080
3300.0	511D338M020FR4D	0.630 x 1.417 [16.0 x 36.0]	0.128	0.060	1.920	2.810	0.064
25 WV_{DC} AT + 105 °C, SURGE = 32 V							
47.0 (1)	511D476M025AA4D	0.236 x 0.433 [6.0 x 11.0]	6.120	2.940	0.089	0.127	2.950
100.0	511D107M025BB4D	0.315 x 0.472 [8.0 x 12.0]	2.914	1.350	0.158	0.232	1.350
1200.0	511D128M025EK4D	0.630 x 0.984 [16.0 x 25.0]	0.239	0.110	1.127	1.660	0.105
2200.0	511D228M025ER4D	0.630 x 1.417 [16.0 x 36.0]	0.162	0.064	1.580	2.520	0.074
35 WV_{DC} AT + 105 °C, SURGE = 44 V							
120.0	511D127M035CC4D	0.394 x 0.512 [10.0 x 13.0]	1.830	1.010	0.239	0.323	0.980
330.0	511D337M035CG4D	0.394 x 0.787 [10.0 x 20.0]	0.677	0.305	0.468	0.697	0.310
1000.0	511D108M035EK4D	0.630 x 0.984 [16.0 x 25.0]	0.223	0.110	1.170	1.660	0.112
1500.0	511D158M035EN4D	0.630 x 1.260 [16.0 x 32.0]	0.165	0.078	1.490	2.180	0.078
2200.0	511D228M035FR4D	0.709 x 1.417 [18.0 x 36.0]	0.121	0.060	1.980	2.810	0.062
40 WV_{DC} AT + 105 °C, SURGE = 50 V							
100.0	511D107M040CC4D	0.394 x 0.512 [10.0 x 13.0]	1.939	1.010	0.232	0.323	0.981
220.0	511D227M040CG4D	0.394 x 0.787 [10.0 x 20.0]	0.883	0.305	0.411	0.698	0.311
330.0	511D337M040DG4D	0.492 x 0.787 [12.5 x 20.0]	0.588	0.210	0.573	0.959	0.221
470.0	511D477M040DK4D	0.492 x 0.984 [12.5 x 25.0]	0.407	0.151	0.719	1.190	0.157
1000.0	511D108M040EN4D	0.630 x 1.260 [16.0 x 32.0]	0.193	0.078	1.390	2.180	0.078
50 WV_{DC} AT + 105 °C, SURGE = 63 V							
47.0	511D476M050BB4D	0.315 x 0.472 [8.0 x 12.0]	3.884	1.510	0.137	0.221	1.450
120.0	511D127M050CD4D	0.394 x 0.630 [10.0 x 16.0]	1.320	0.466	0.302	0.509	0.488
270.0	511D277M050DG4D	0.492 x 0.787 [12.5 x 20.0]	0.601	0.221	0.567	0.937	0.231
1000.0	511D108M050ER4D	0.630 x 1.417 [16.0 x 36.0]	0.161	0.065	1.590	2.510	0.068
1500.0	511D158M050FR4D	0.709 x 1.417 [18.0 x 36.0]	0.153	0.065	1.760	2.710	0.068
63 WV_{DC} AT + 105 °C, SURGE = 79 V							
47.0	511D476M063CC4D	0.394 x 0.512 [10.0 x 13.0]	3.076	1.170	0.184	0.299	1.110
150.0	511D157M063CG4D	0.394 x 0.787 [10.0 x 20.0]	1.010	0.331	0.385	0.671	0.341
470.0	511D477M063EK4D	0.630 x 0.984 [16.0 x 25.0]	0.307	0.125	0.995	1.560	0.125
1200.0	511D128M063FR4D	0.709 x 1.417 [18.0 x 36.0]	0.165	0.065	1.690	2.710	0.068
75 WV_{DC} AT + 105 °C, SURGE = 90 V							
33.0	511D336M075CC4D	0.394 x 0.512 [10.0 x 13.0]	4.440	1.210	0.153	0.295	1.210
100.0	511D107M075CG4D	0.394 x 0.787 [10.0 x 20.0]	1.460	0.341	0.318	0.661	0.341
150.0	511D157M075DG4D	0.492 x 0.787 [12.5 x 20.0]	1.010	0.261	0.439	0.862	0.261
220.0	511D227M075DK4D	0.492 x 0.984 [12.5 x 25.0]	0.666	0.211	0.589	1.050	0.211
470.0	511D477M075EN4D	0.630 x 1.260 [16.0 x 32.0]	0.307	0.105	1.110	1.880	0.105
100 WV_{DC} AT + 105 °C, SURGE = 125 V							
4.7 (1)	511D475M100AA4D	0.236 x 0.433 [6.0 x 11.0]	30.79	4.310	0.041	0.106	4.210
10.0 (1)	511D106M100BB4D	0.314 x 0.472 [8.0 x 12.0]	14.63	1.810	0.071	0.202	1.710
33.0	511D336M100CD4D	0.394 x 0.630 [10.0 x 16.0]	4.440	0.531	0.165	0.477	0.531
120.0	511D127M100DK4D	0.492 x 0.984 [12.5 x 25.0]	1.210	0.215	0.437	1.030	0.215
330.0	511D337M100ER4D	0.630 x 1.260 [16.0 x 32.0]	0.444	0.076	0.958	2.320	0.078
470.0	511D477M100FR4D	0.709 x 1.417 [18.0 x 36.0]	0.361	0.071	1.150	2.610	0.074

Note

(1) These values are normally stocked. See Original Ratings for more values that are stocked.

For technical questions, contact: aluminumcaps4@vishay.com
THIS DOCUMENT IS SUBJECT TO CHANGE WITHOUT NOTICE. THE PRODUCTS DESCRIBED HEREIN AND THIS DOCUMENT ARE SUBJECT TO SPECIFIC DISCLAIMERS, SET FORTH AT www.vishay.com/doc?91000

ELECTRICAL DATA AND ORDERING INFORMATION

CAPACITANCE (µF)	PART NUMBER	NOMINAL CASE SIZE D x L IN INCHES [mm]	MAX. ESR AT + 25 °C (mΩ)		MAX. RIPPLE AT + 85 °C (A)		MAX. IMPEDANCE AT + 25 °C (mΩ) 100 Hz
			120 Hz	20 kHz TO 40 kHz	120 Hz	20 kHz TO 40 kHz	
160 WV_{DC} AT + 105 °C, SURGE = 185 V							
10.0	511D106M160CD4D	0.394 x 0.630 [10.0 x 16.0]	16.09	4.910	0.086	0.157	4.910
22.0	511D226M160DG4D	0.492 x 0.787 [12.5 x 20.0]	7.330	3.210	0.162	0.245	3.210
33.0	511D336M160DK4D	0.492 x 0.984 [12.5 x 25.0]	4.880	2.250	0.216	0.319	2.250
100.0	511D107M160ER4D	0.630 x 1.260 [16.0 x 32.0]	1.610	0.531	0.504	0.876	0.531
200 WV_{DC} AT + 105 °C, SURGE = 225 V							
1.5	511D155M200AA4D	0.236 x 0.433 [6.0 x 11.0]	110.010	33.110	0.021	0.038	33.010
22.0	511D226M200DG4D	0.492 x 0.787 [12.5 x 20.0]	7.330	3.210	0.162	0.245	3.210
33.0	511D336M200DK4D	0.492 x 0.984 [12.5 x 25.0]	4.880	2.250	0.216	0.319	2.250
47.0	511D476M200EK4D	0.630 x 0.984 [16.0 x 25.0]	3.384	1.210	0.299	0.501	1.210
120.0	511D127M200FR4D	0.709 x 1.417 [18.0 x 36.0]	1.420	0.481	0.577	0.991	0.491
250 WV_{DC} AT + 105 °C, SURGE = 275 V							
10.0	511D106M250CG4D	0.394 x 0.787 [10.0 x 20.0]	16.090	3.760	0.096	0.198	3.760
33.0	511D336M250EK4D	0.630 x 0.984 [16.0 x 25.0]	4.880	1.270	0.249	0.489	1.270
47.0	511D476M250EN4D	0.630 x 1.260 [16.0 x 32.0]	3.380	0.721	0.331	0.717	0.721

Note

(1) These values are normally stocked. See Original Ratings for more values that are stocked.

ORIGINAL RATINGS

CAPACITANCE (µF)	CASE CODE	PART NUMBER
6.3 WV_{DC} AT + 105 °C, SURGE = 8 V		
470.0	CC	511D477M6R3CC4D
1000.0	CG	511D108M6R3CG4D
2200.0	DK	511D228M6R3DK4D
10 WV_{DC} AT + 85 °C, SURGE = 13 V		
470.0	CD	511D477M010CD4D
1000.0	DG	511D108M010DG4D
4700.0	ER	511D478M010ER4D
16 WV_{DC} AT + 105 °C, SURGE = 20 V		
47.0 (1)	AA	511D476M016AA4D
100.0 (1)	BB	511D107M016BB4D
220.0	CC	511D227M016CC4D
25 WV_{DC} AT + 105 °C, SURGE = 32 V		
220.0	CD	511D227M025CD4D
470.0	DG	511D477M025DG4D
1000.0	EK	511D108M025EK4D
35 WV_{DC} AT + 105 °C, SURGE = 44 V		
22.0	AA	511D226M035AA4D
47.0	BB	511D476M035BB4D
100.0 (1)	CC	511D107M035CC4D
220.0	CG	511D227M035CG4D
470.0	DK	511D477M035DK4D
1000.0	EN	511D108M035EN4D
50 WV_{DC} AT + 105 °C, SURGE = 63 V		
47.0	CC	511D476M050CC4D
220.0	DK	511D227M050DK4D
63 WV_{DC} AT + 105 °C, SURGE = 70 V		
10.0 (1)	AA	511D106M063AA4D
22.0	BB	511D226M063BB4D
47.0 (1)	CD	511D476M063CD4D
100.0	CG	511D107M063CG4D
220.0	EK	511D227M063EK4D
470.0	EN	511D477M063EN4D
100 WV_{DC} AT + 105 °C, SURGE = 125 V		
22.0	CD	511D226M100CD4D
47.0	CG	511D476M100CG4D
220.0	EN	511D227M100EN4D

Note

(1) These values are normally stocked.

For technical questions, contact: aluminumcaps4@vishay.com
THIS DOCUMENT IS SUBJECT TO CHANGE WITHOUT NOTICE. THE PRODUCTS DESCRIBED HEREIN AND THIS DOCUMENT ARE SUBJECT TO SPECIFIC DISCLAIMERS, SET FORTH AT www.vishay.com/doc?91000

Disclaimer

ALL PRODUCT, PRODUCT SPECIFICATIONS AND DATA ARE SUBJECT TO CHANGE WITHOUT NOTICE TO IMPROVE RELIABILITY, FUNCTION OR DESIGN OR OTHERWISE.

Vishay Intertechnology, Inc., its affiliates, agents, and employees, and all persons acting on its or their behalf (collectively, "Vishay"), disclaim any and all liability for any errors, inaccuracies or incompleteness contained in any datasheet or in any other disclosure relating to any product.

Vishay makes no warranty, representation or guarantee regarding the suitability of the products for any particular purpose or the continuing production of any product. To the maximum extent permitted by applicable law, Vishay disclaims (i) any and all liability arising out of the application or use of any product, (ii) any and all liability, including without limitation special, consequential or incidental damages, and (iii) any and all implied warranties, including warranties of fitness for particular purpose, non-infringement and merchantability.

Statements regarding the suitability of products for certain types of applications are based on Vishay's knowledge of typical requirements that are often placed on Vishay products in generic applications. Such statements are not binding statements about the suitability of products for a particular application. It is the customer's responsibility to validate that a particular product with the properties described in the product specification is suitable for use in a particular application. Parameters provided in datasheets and/or specifications may vary in different applications and performance may vary over time. All operating parameters, including typical parameters, must be validated for each customer application by the customer's technical experts. Product specifications do not expand or otherwise modify Vishay's terms and conditions of purchase, including but not limited to the warranty expressed therein.

Except as expressly indicated in writing, Vishay products are not designed for use in medical, life-saving, or life-sustaining applications or for any other application in which the failure of the Vishay product could result in personal injury or death. Customers using or selling Vishay products not expressly indicated for use in such applications do so at their own risk. Please contact authorized Vishay personnel to obtain written terms and conditions regarding products designed for such applications.

No license, express or implied, by estoppel or otherwise, to any intellectual property rights is granted by this document or by any conduct of Vishay. Product names and markings noted herein may be trademarks of their respective owners.

Material Category Policy

Vishay Intertechnology, Inc. hereby certifies that all its products that are identified as RoHS-Compliant fulfill the definitions and restrictions defined under Directive 2011/65/EU of The European Parliament and of the Council of June 8, 2011 on the restriction of the use of certain hazardous substances in electrical and electronic equipment (EEE) - recast, unless otherwise specified as non-compliant.

Please note that some Vishay documentation may still make reference to RoHS Directive 2002/95/EC. We confirm that all the products identified as being compliant to Directive 2002/95/EC conform to Directive 2011/65/EU.

Vishay Intertechnology, Inc. hereby certifies that all its products that are identified as Halogen-Free follow Halogen-Free requirements as per JEDEC JS709A standards. Please note that some Vishay documentation may still make reference to the IEC 61249-2-21 definition. We confirm that all the products identified as being compliant to IEC 61249-2-21 conform to JEDEC JS709A standards.