RB151 THRU RB157

SINGLE PHASE 1.5 AMP BRIDGE RECTIFIERS

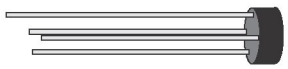

VOLTAGE RANGE

50 to 1000 Volts

CURRENT

1.5 Amperes

FEATURES

* Ideal for printed circuit board
* Low forward voltage
* Low leakage current
* Polarity: marked on body
* Mounting position: Any
* Weight: 1.04 grams

RB-15

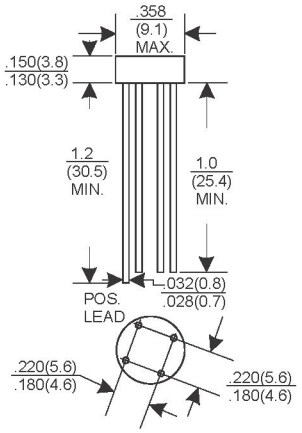

Dimensions in inches and (millimeters)

MAXIMUM RATINGS AND ELECTRICAL CHARACTERISTICS

Rating 25°C ambient temperature uniess otherwies specified.
Single phase half wave, 60Hz, resistive or inductive load.
For capacitive load, derate current by 20%.

TYPE NUMBER	RB151	RB152	RB153	RB154	RB155	RB156	RB157	UNITS
Maximum Recurrent Peak Reverse Voltage	50	100	200	400	600	800	1000	V
Maximum RMS Voltage	35	70	140	280	420	560	700	V
Maximum DC Blocking Voltage	50	100	200	400	600	800	1000	V
Maximum Average Forward Rectified Current .375"(9.5mm) Lead Length at Ta=25°C	1.5							A
Peak Forward Surge Current, 8.3 ms single half sine-wave superimposed on rated load (JEDEC method)	50							A
Maximum Forward Voltage Drop per Bridge Element at 1.0A D.C.	1.0							V
Maximum DC Reverse Current Ta=25°C	10							μA
at Rated DC Blocking Voltage Ta=100°C	500							μA
Operating Temperature Range, T_J	-65 — +125							°C
Storage Temperature Range, T_{STG}	-65 — +150							°C

RATING AND CHARACTERISTIC CURVES (RB151 THRU RB157)

FIG.1-TYPICAL FORWARD CURRENT DERATING CURVE

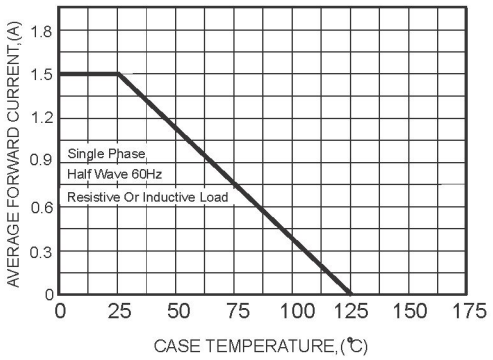

FIG.2-MAXIMUM NON-REPETITIVE FORWARD SURGE CURRENT

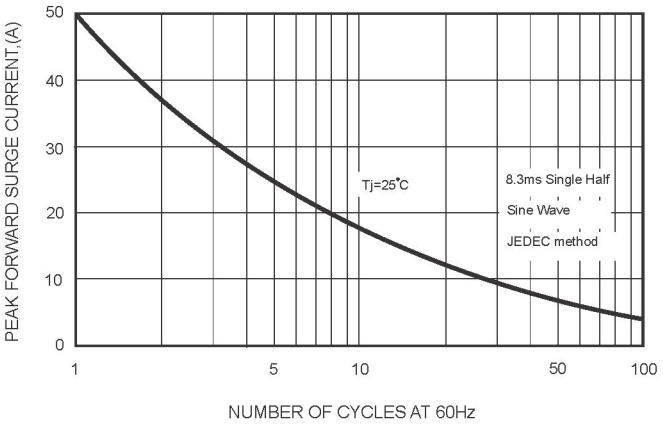

FIG.3-TYPICAL FORWARD CHARACTERISTICS

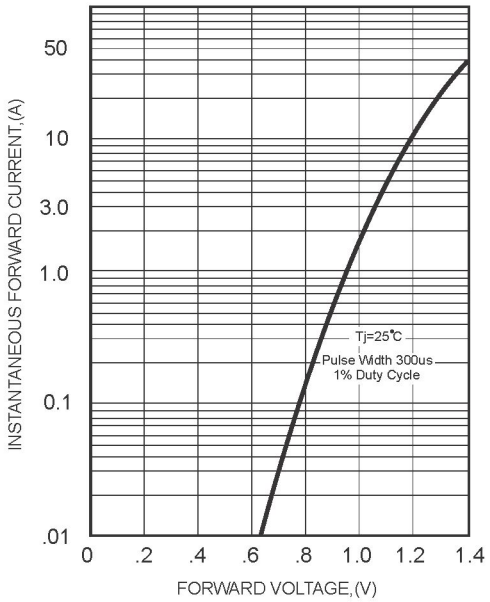
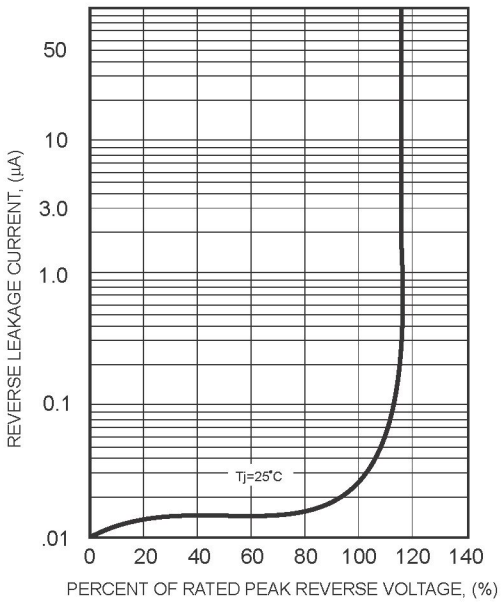
FIG.4-TYPICAL REVERSE CHARACTERISTICS